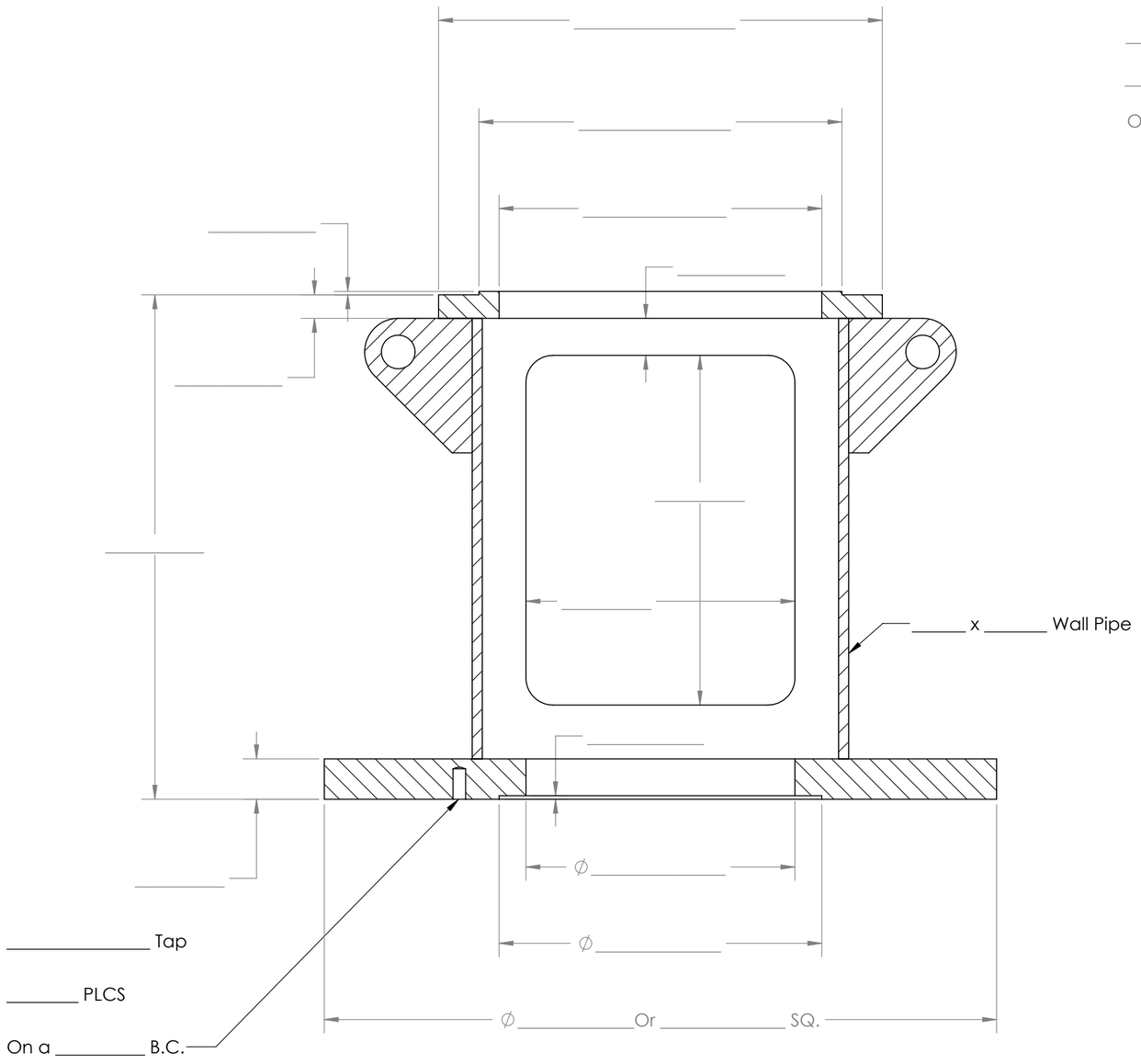

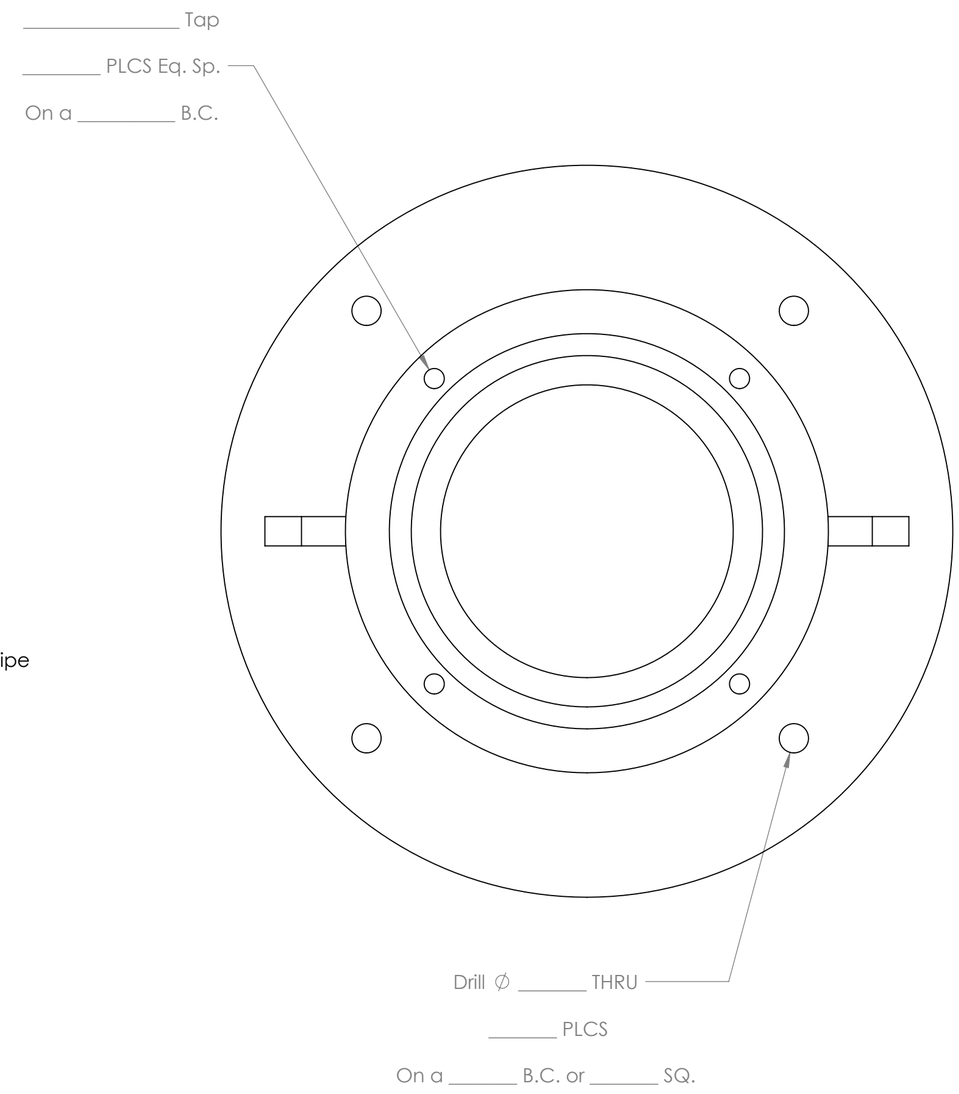

PROPRIETARY AND CONFIDENTIAL

Material procurement and production for the good identified in this purchase order will not be initiated until Purchaser's approval of the attached drawing, including dimensions and design by an authorized representative of Purchaser. The Purchaser acknowledges the Custom Pipe & Fabrication is not a licensed engineer and does not stamp or sign the drawings it prepares. This drawing is the proprietary property of Custom Pipe & Fabrication Inc. and may not be utilized by the Purchaser for any purposes other than for the approval of manufacture by Custom Pipe & Fabrication Inc.

UNLESS OTHERWISE SPECIFIED:

DIMENSIONS ARE IN INCHES
TOLERANCES:
ANGLES ± 1.5°
X.X ± 0.060
X.XX ± 0.030
X.XXX ± 0.010

Parallel: .003 | Concentric: .003

MATERIAL

FINISH

DO NOT SCALE DRAWING

	NAME	DATE
DRAWN	T. Sanders	
CHECKED		
ENG APPR.		
MFG APPR.		
Q.A.		

COMMENTS:

CUSTOM PIPE & FABRICATION INC.

TITLE:

Motor Stand

DWG. NO.

REV 1

SCALE: 1:8

SHEET 1 OF 1